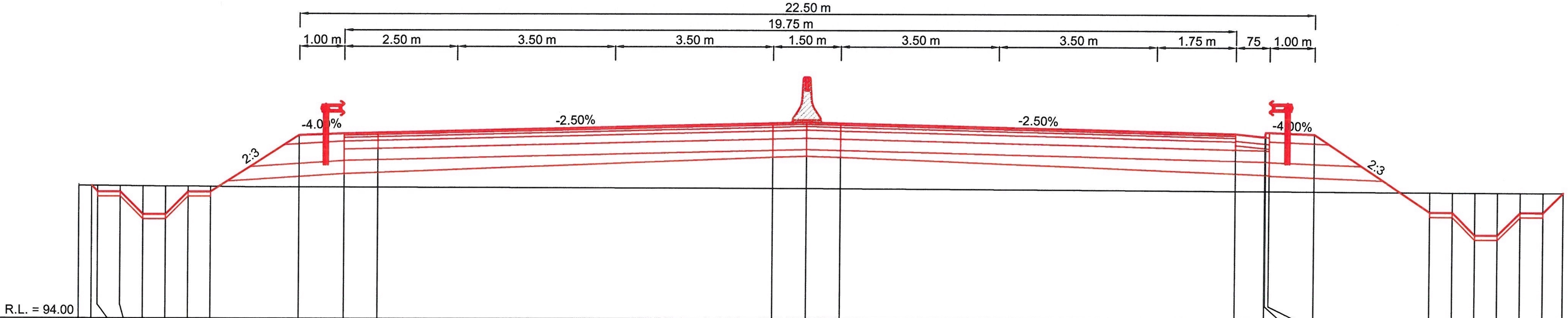

COTE PROIECT	96.94	96.80	96.80	96.30	96.30	96.80	96.80	98.06	98.10	98.11	98.33	98.35	98.33	98.11	98.05	98.15	98.15	98.11	96.39	96.39	95.89	95.89	96.39	96.39	96.83
COTE TEREN	96.94	96.94	96.93	96.93	96.93	96.92	96.92	96.91	96.91	96.91	96.90	96.89	96.89	96.85	96.85	96.85	96.85	96.85	96.84	96.84	96.84	96.84	96.84	96.83	96.83
DISTANTE	-15.86	-15.72	-15.22	-14.72	-14.22	-13.72	-13.22	-11.25	-10.25	-9.50	-0.75	0.00	0.75	9.50	10.15	10.17	10.25	11.25	13.82	14.32	14.82	15.32	15.82	16.32	16.77

KM = 6675.00

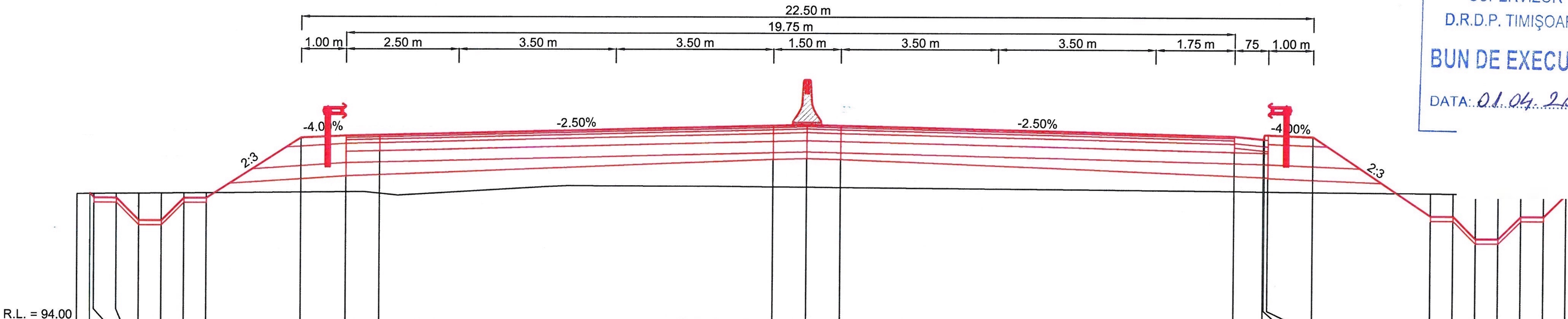

COTE PROIECT	96.86	96.76	96.76	96.26	96.26	96.76	96.76	98.11	98.15	98.17	98.39	98.41	98.39	98.17	98.10	98.20	98.20	98.16	96.41	96.41	95.91	95.91	96.41	96.41	96.90
COTE TEREN	96.86	96.86	96.87	96.87	96.87	96.88	96.88	96.90	96.91	96.88	97.04	97.03	97.02	96.96	96.95	96.95	96.95	96.94	96.92	96.92	96.92	96.91	96.91	96.90	96.90
DISTANTE	-15.95	-15.85	-15.35	-14.85	-14.35	-13.85	-13.35	-11.25	-10.25	-9.50	-0.75	0.00	0.75	9.50	10.15	10.17	10.25	11.25	13.88	14.38	14.88	15.38	15.88	16.38	16.87

KM = 6650.00

SUPERVIZOR
D.R.D.P. TIMIŞOARA
BUN DE EXECUȚIE
DATA: 01.04.2022

BENEFICIAR: COMPANIA NATIONALA DE ADMINISTRAREA INFRASTRUCTURII RUTIERE S.A. (C.N.A.I.R. S.A.)

ANTREPRENOR: TODINI CONSTRUZIONI GENERALI S.p.A.

TITLU PROIECT: PROIECTARE SI EXECUȚIE „DRUM DE LEGĂTURĂ AUTOSTRADA A1 ARAD - TIMIȘOARA - DN 69"

FAZA PROIECT	CONTRACT NR. / PROIECT NR.
PROIECT TEHNIC DE EXECUTIE (P.T.E.)	92/7703/01.02.2021 / 08/2021

SPECIFICATIE	NUME	SEMNATURA
DESENAT	Teh. Sorin VASILACHE	
PROIECTAT	Ing. Mihai COROIAN	
SEF PROIECT	Ing. Catalin GRUIANU	
VERIFICAT	Ing. Adrian NISTOR	

DATA	MĂRIMEA	SCARĂ
Martie 2022	A3	1:100

TITLU PLANSA: LUCRARI DE INFRASTRUCTURA RUTIERA
PROFILURI TRANSVERSALE CURENTE
DRUM DE LEGATURA DN 69 - A1

NUMAR PLANSA: PTC - 143 | **PICHET:** -

Revizie		
NR.	DATA	DESCRIERE
0	08.2021	Emitere P.T.E.
1	09.2021	Conf. nr.290/DLA1-224
2	02.2022	Conf. ASR 92/93833

PAGE 1 / 1